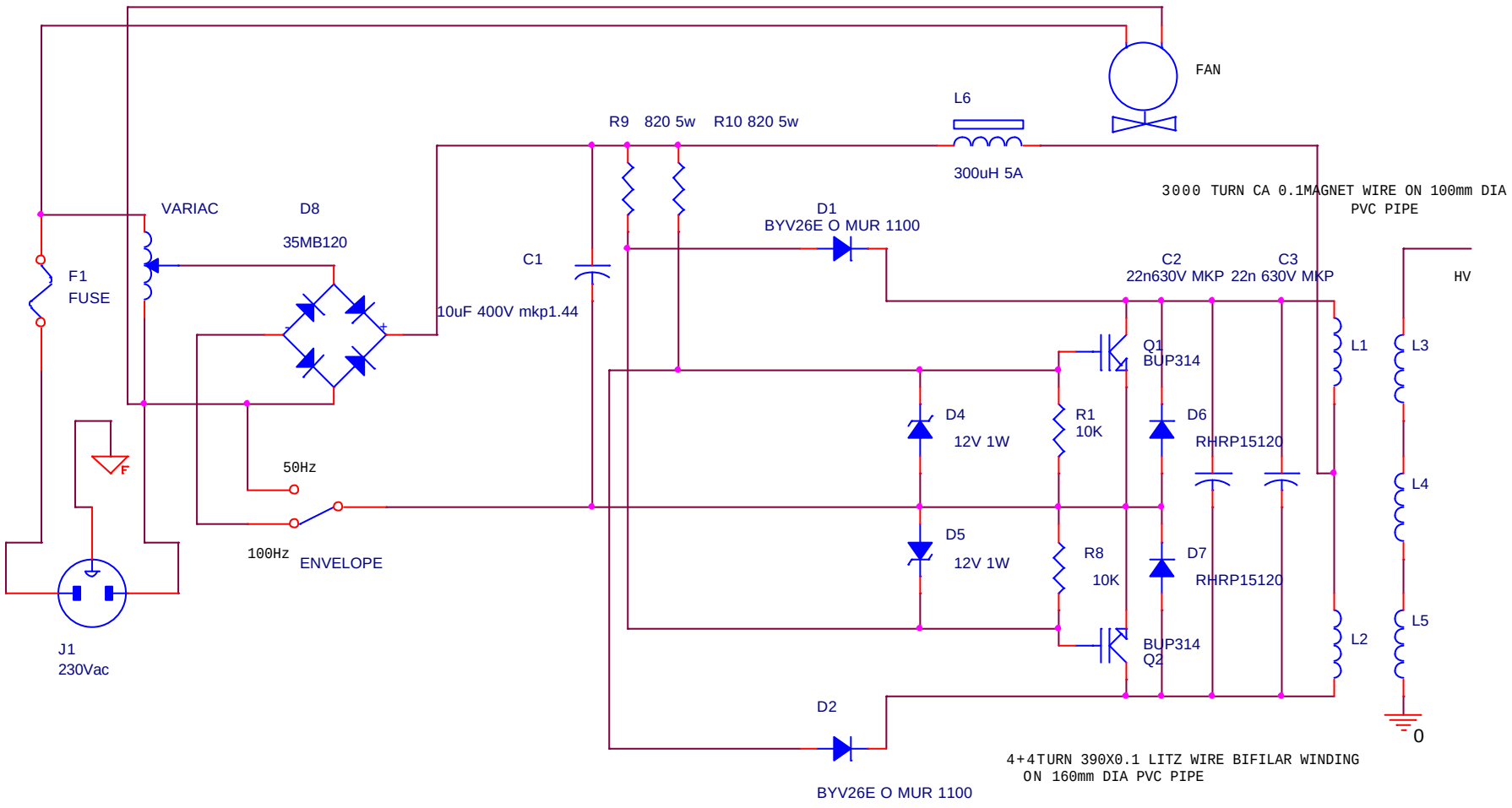

Title <Title>		
Size A	Document Number <Doc>	Rev <RevCode>
Date: Tuesday, February 25, 2003	Sheet 1 of 1	