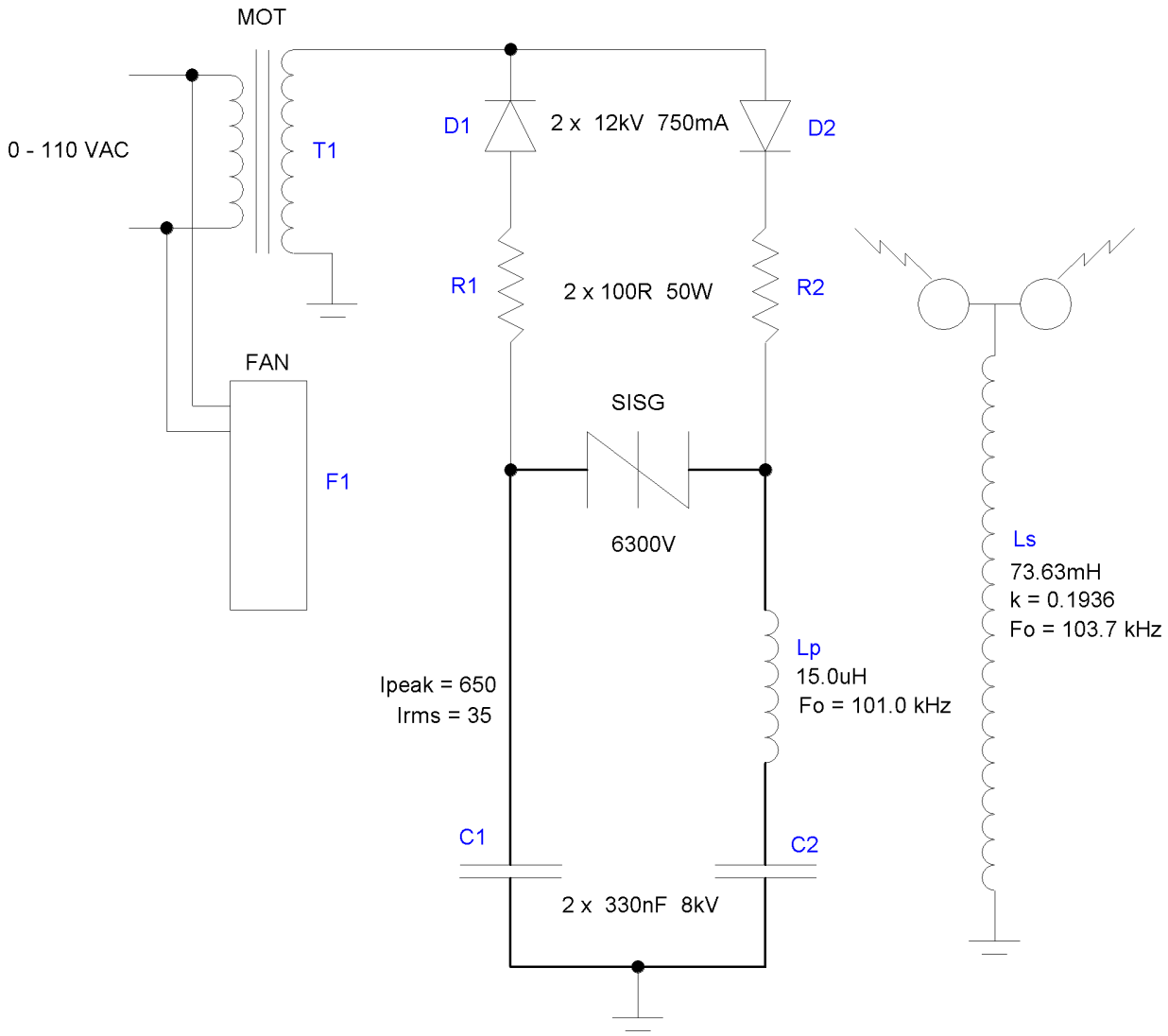

PIRANHA MOT - SISG Tesla Coil
August 23, 2006 Terry Fritz