PIRANHA

A Powerful SISG Tesla Coil

Terry Fritz
Sept. 1, 2006

V-1.00

Caution: Tesla coils can be extremely dangerous! Do not attempt to reproduce or use these devices unless you really know what your are doing!!

WARNING!!!

1. The primary circuits can operate at 16000 volts, 1000 amps, 2400W, 12 Joules, 1000BPS.

2. The strike distance can be in excess of 9 feet.

3. The circuits operate totally "silently" and fire, "without warning", "instantly", at "full power".

4. The primary circuits can deliver 200 amps peak and up to 25 amps "indefinitely" into the human body (Your very dead...)!!

5. The primary circuits are "fully" enclosed and double insulated to make accidental human contact "impossible".

6. Great knowledge of High-Voltage electronics is needed to deal with such a coil safely.

7. Working with these types of Tesla coils is fully at your "OWN RISK"!!!

8. Always, be "very very" careful!! These state-of-the-art high-efficiency machines are "NOT TOYS"!!!

Introduction

With the introduction of the new SISG (SIDAC/IGBT Spark Gap), many new possibilities for Tesla coil design have been opened. The SISG's high efficiency, lower operating voltage, and higher current ability allow new designs for Tesla coils to be implemented. The "PIRANHA" project is a new Tesla coil solid state design which uses a single MOT (Microwave Oven Transformer) in a resonant voltage tripler configuration to charge a large primary cap quickly to provide high BPS operation.

Schematic Diagram

The PIRANHA system is very simple! It is based on a typical conventional ~100kHz MOT Tesla coil primary/secondary system. Only the SISG, two small power resistors, two high voltage rectifiers and a dual series primary capacitor are needed.

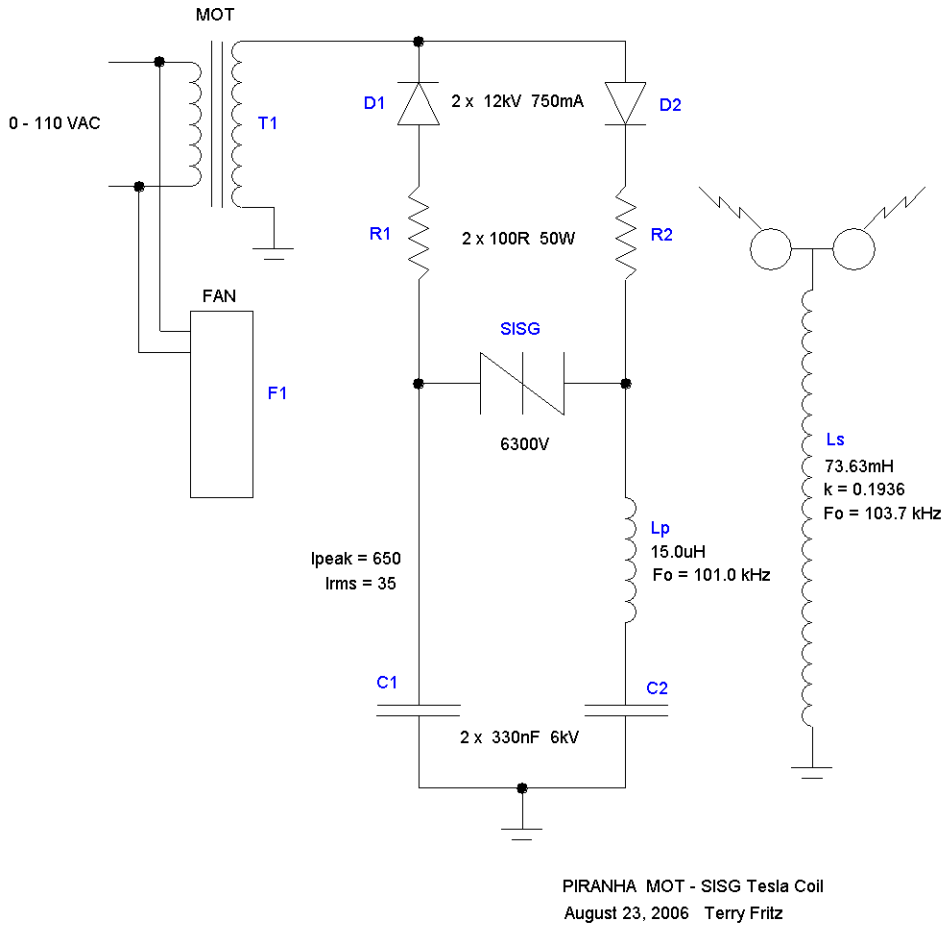

Figure 1. Schematic Diagram of the PIRANHA Tesla Coil

Parts List

C1, C2

This is an MMC style primary capacitor in two 330nF sections in series. The center is grounded to the MOT frame. These capacitors must be able to withstand 650 amps peak, 35 amps RMS and 6000 volts per section. A typical design could use 18 Cornell Dubilier 940C20P33K-F capacitors in two 3 x 3 arrays.

D1, D2

These are 12000V 750mA large microwave oven diodes (AMI3347). Strings of 12 x 1N4007 diodes could be used also.

F1

A fan that works well at low voltage. DigiKey# 259-1386 works well along with the # CR224-ND finger guard.

R1, R2

Two 50 watt 100 ohm ceramic wire wound resistors such as DigiKey# FVT50-100-ND.

T1

A common Microwave Oven Transformer.

SISG

Two of Mark Dunn's 4 section SISG boards.

Tesla Coil

A typical Tesla coil primary and secondary that tune to about 100kHz. The spark length will be about 45 inches.

Construction

The parts are simply attached to a 11 x 14 inch piece of plywood.

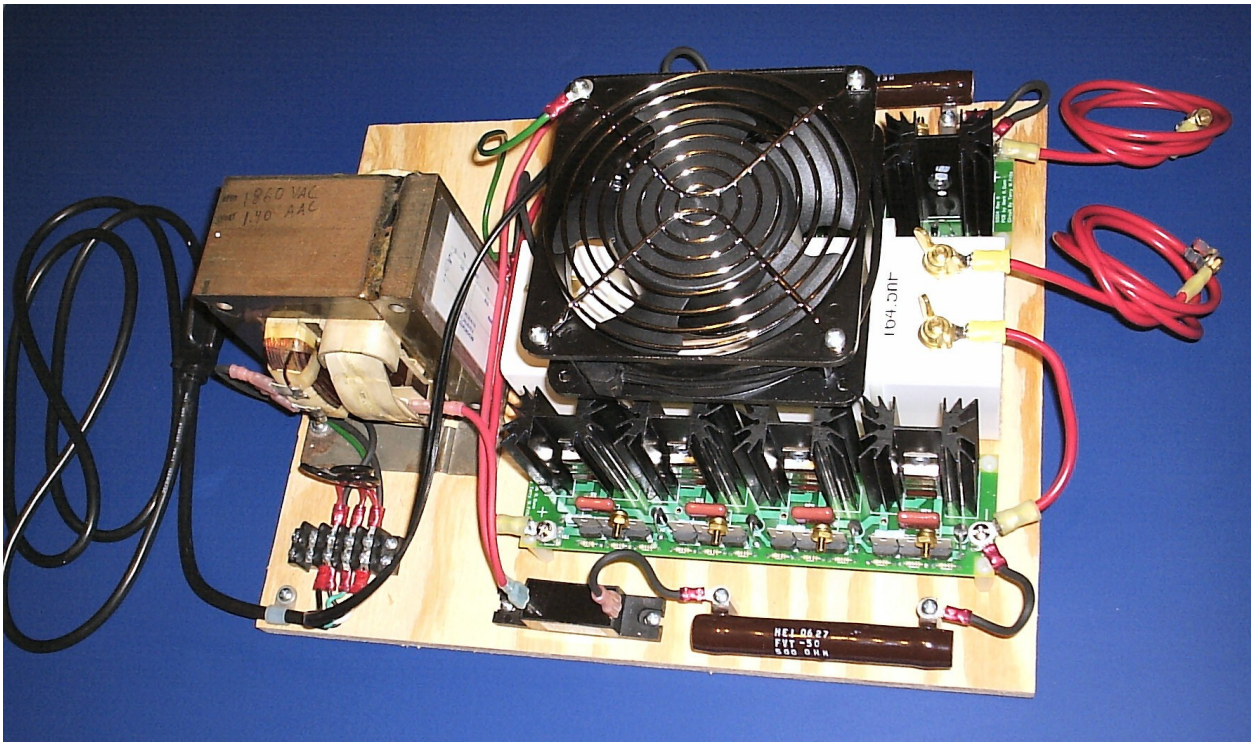

Figure 2. The PIRANHA "Engine"

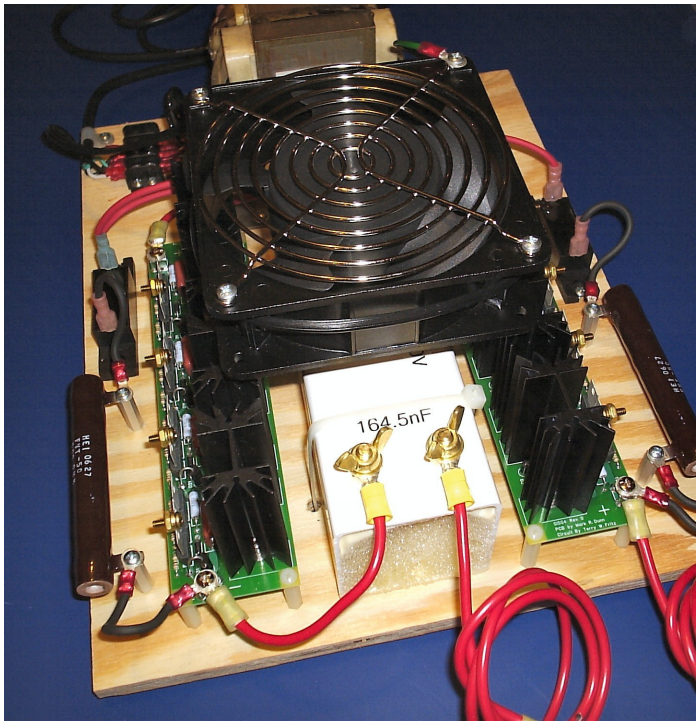

Figure 3. Front View

Operation

The SISG firing voltage can be adjusted in 300V increments buy shorting some of the SIDACS with small brass bolts or simply using fewer of the 900V sections.

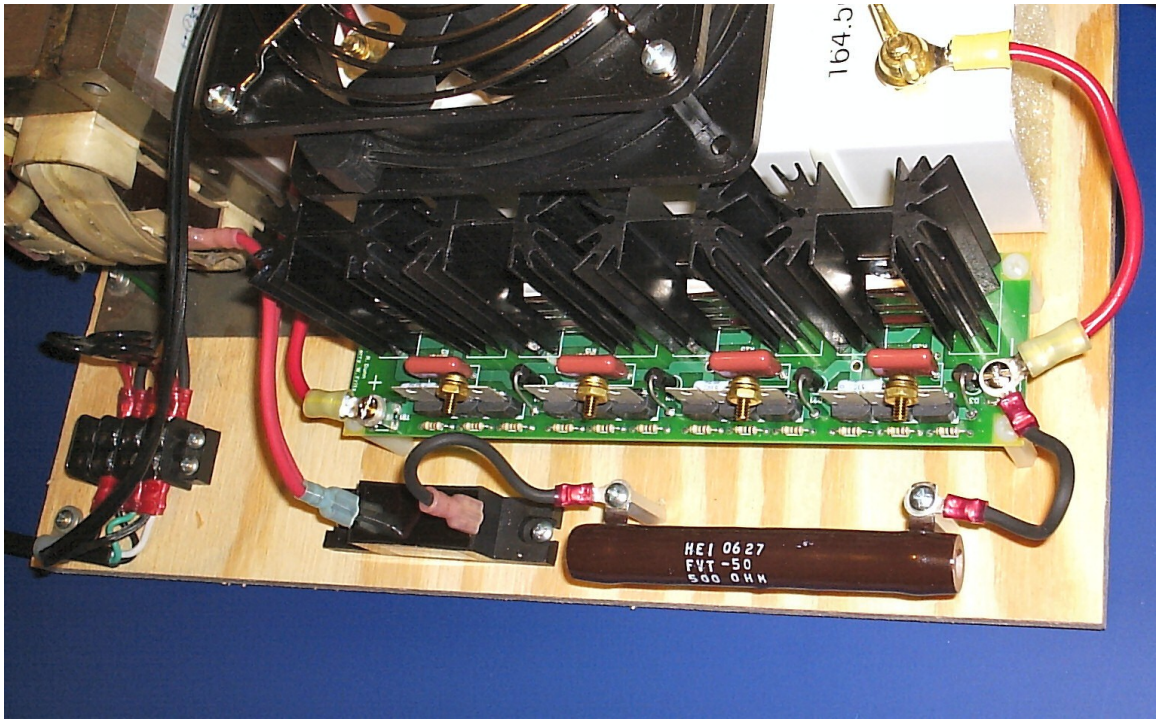

Figure 4. Small brass bolts used to reduce the firing voltage.

The PIRANHA engine is simply run from a variac and the voltage is increased until the gap fires. A small movie is linked to the picture below:

Figure 5. PIRANHA movie (4800V)

Details

More information can be found in the following links:

http://drsstc.com/~piranha

http://drsstc.com/~sisg/

http://hot-streamer.com/temp/FormulasForTeslaCoils.pdf