PIRANHA SISG Tesla Coil

Oct. 3, 2006

Terry Fritz

Version 2.01

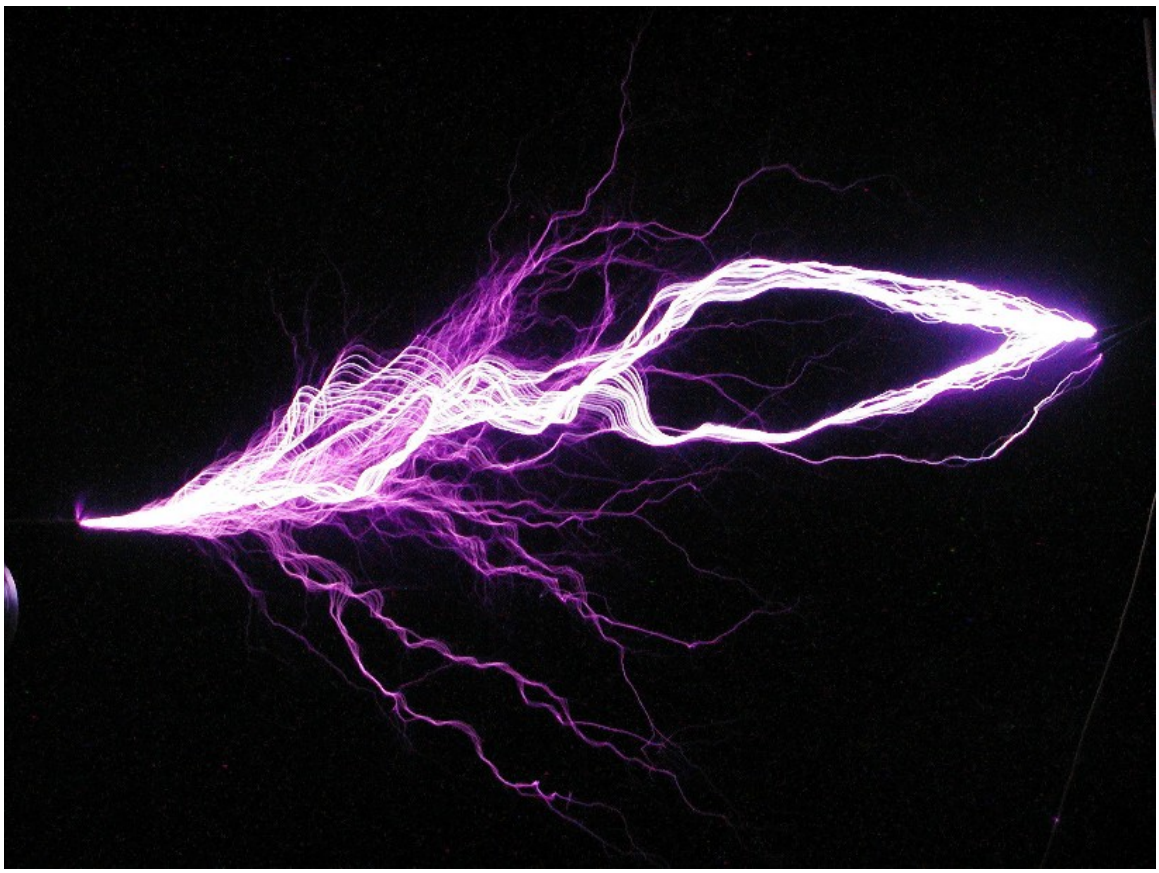

28 inch arcs at Vfire = 4800V

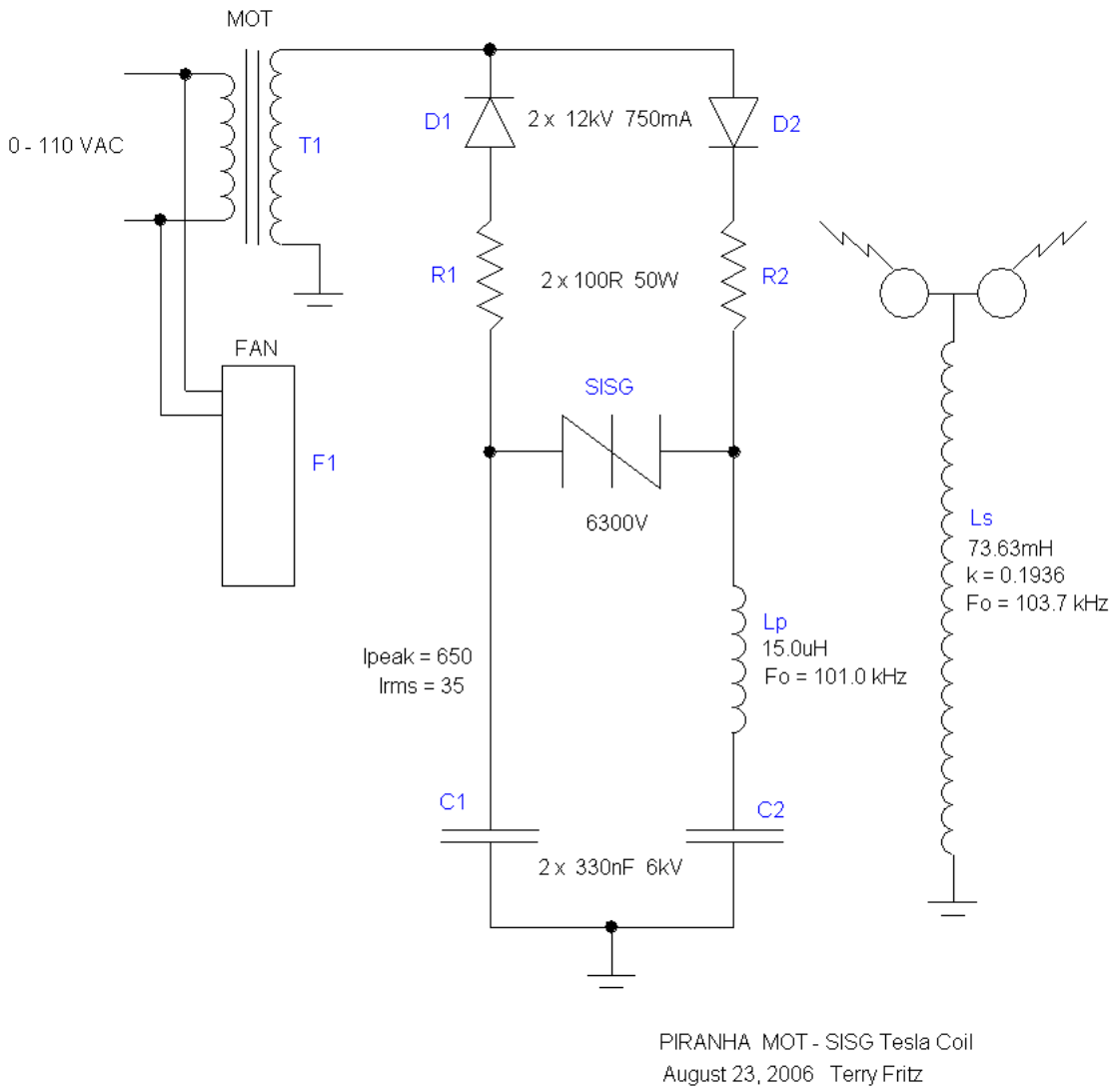

PIRANHA Schematic Diagram

ScanTesla:

```
ScanTesla  V-8.00  August 18, 2006  Terry Fritz
C1 1.650000e-007 1.650000e-007 0.500000e-007
R1 2.500000e-001 2.500000e-001 1.000000e+000
L1 1.400000e-005 1.600000e-005 1.000000e-008
L2 7.363000e-002 7.363000e-002 1.000000e-003
K12 1.936000e-001 1.936000e-001 5.000000e-002
R2 2.050000e+002 2.050000e+002 1.000000e+000
C2 3.200000e-011 3.200000e-011 1.000000e-012
C3 5.700000e-012 5.700000e-012 -1.000000e-012
R3 2.200000e+005 2.200000e+005 1.000000e+003
T1 0.000000e+000 5.000000e-004 -1.000000e-007
Terminal Diameter 6.500000e+000
Strike Distance 1.000000e+004
Vrail 0.000000e+000
VCpri_init 6.300000e+003
BPS 2.500000e+002
DwellTime 2.250000e-004 2.250000e-004 1.000000e-007
Current_Limit 1.000000e+005
CoilPower_Limit 1.000000e+005
Goal Type 3

LeaderLengthVsecFactor 1.286000e+001
LeaderLengthPowerFactor 9.735000e-001
CapacitanceLengthFactor 1.000000e+000
StikeDistanceFactor 1.300000e+000
Elevation (Feet) 5.300000e+003
Temperature (F) 7.700000e+001

ScanTesla  V-8.00  August 18, 2006  Terry Fritz
Goal =       33.990240029  Maximum Leader Length
Model Number = 101
Goal Number = 95
Cprimary (nF) =  165.000
Lprimary (uH) =   15.000
Rprimary (Ohm) =  0.250
Coupling = 0.1936
Csecondary (pF) = 32.00
Lsecondary (mH) =   73.630
Rsecondary (Ohm) =  205.0
Cstreamer (pF) = 4.582
Rstreamer (kOhm) =  220.0
BPS =  250.000
Dwell (T1) Time (uSec) =  225.0
Ilprimay Maximum (A) = -648.82
ICprimary RMS (Arms) = 35.53              ILsecondary RMS (Arms) = 0.51323
VCprimary Maximum (kV) =   6.287
VCsecondary Maximum (kV) =  -359.538
Coil Power (W) =    818.61                Primary Bang Energy (J) =   3.274
Streamer Power (W) =    448.59            Streamer Bang Energy (J) =   1.794
Streamer Length (in) =  33.99 ( 44.19)    Air Streamer
Streamer Energy Length (in) =  24.03      Streamer Power Length (in) =  24.03
Primary F0 (Hz) = 101165.5                Secondary F0 (Hz) = 103685.4
Load Energy Rise Time (uSec) =   94.5

Models Tested = 201 / 201
```

Secondary Top Voltage

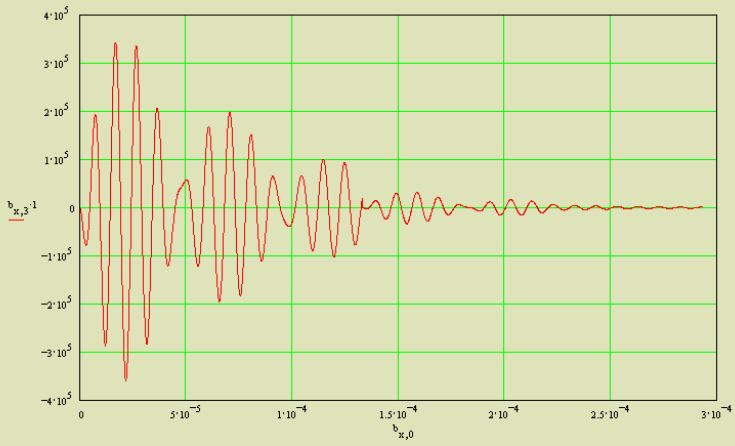

Primary Current

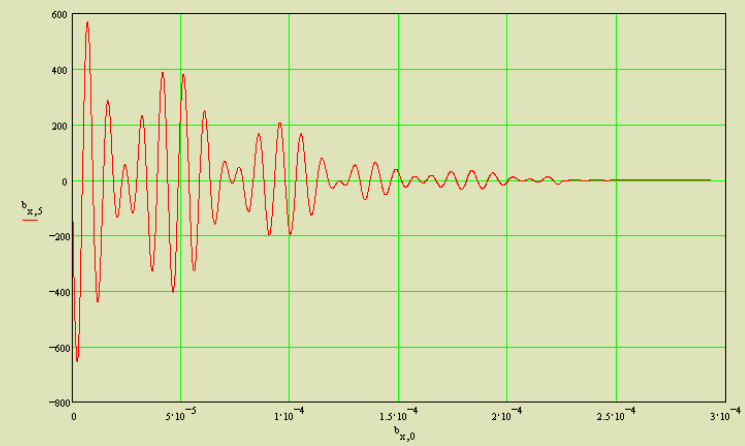

Primary Capacitor Voltage

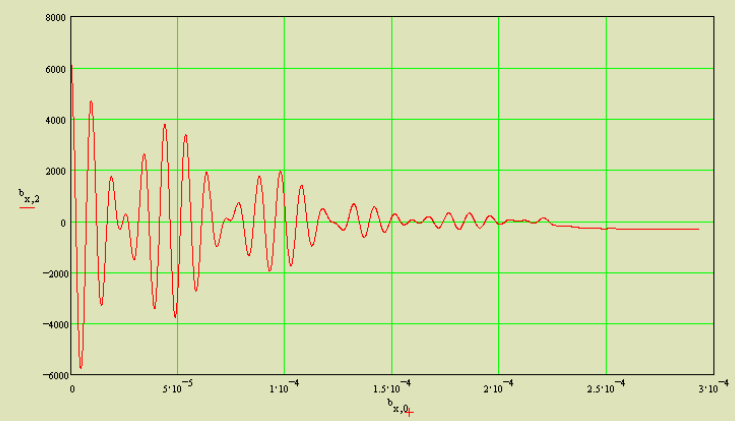

MandK:

```
Mutual Inductance Program V3.1
Copyright (c) 1998, 1999, 2000 by Mark S. Rzeszotarski, Ph.D.

Flat Spiral Primary Coil Geometry
Primary coil inside diameter (inches)=      6.750
Primary coil outside diameter (inches)=     11.805
Number of primary coil turns =      6.740
Wire diameter (inches)=      .2500

Solenoidal Secondary Coil Geometry
Secondary coil diameter (inches)=     6.000
Secondary coil height (inches)=     20.000
Number of secondary coil turns =  1355.000
Secondary coil wire diameter (inches)=      .0126

Calculational Results
Primary coil inductance in microhenries:  Lp =           14.53
Secondary coil inductance in microhenries:  Ls =        73221.55
Figure of Merit (square root of Ls/Lp) =     70.98
Primary coil wire length in feet =      16.30
Secondary coil wire length in feet =    2128.43
DC secondary resistance in ohms:    140.74
Secondary coil distributed capacitance in picofarads:      9.91
(Medhurst formula, assumes one end of secondary is grounded)
```

Position	M	K
.000	199.740	.1936
.100	193.936	.1880
.200	188.172	.1824
.300	182.483	.1769
.400	176.899	.1715
.500	171.437	.1662
.600	166.110	.1610
.700	160.928	.1560
.800	155.895	.1511
.900	151.014	.1464

```
Operating Characteristics
Ctoroid is the added capacitance of the top terminal.
Fres is the resonant operating frequency in kilohertz.
Cpri is the required primary capacitance in nanofarads.
Zpri is the primary surge impedance in ohms.
Zsec is the secondary surge impedance in ohms.
Qsec is the secondary coil quality factor Q.
Rac is the secondary coil RF resistance in ohms.
```

Ctoroid(pF)	.0	5.0	10.0	15.0	20.0	25.0	30.0	35.0
Fres(kHz)	186.9	152.3	131.8	117.9	107.6	99.6	93.1	87.8
Cpri (nF)	49.91	75.10	100.29	125.48	150.68	175.87	201.06	226.25
Zpri(ohms)	17.1	13.9	12.0	10.8	9.8	9.1	8.5	8.0
Zsec(ohms)	85975.	70087.	60650.	54221.	49481.	45800.	42835.	40380.
Qsec	204.9	168.4	146.3	131.1	119.9	111.1	104.0	98.1
Rac (ohms)	419.5	416.2	414.5	413.5	412.8	412.3	411.9	411.5

MicroSim:

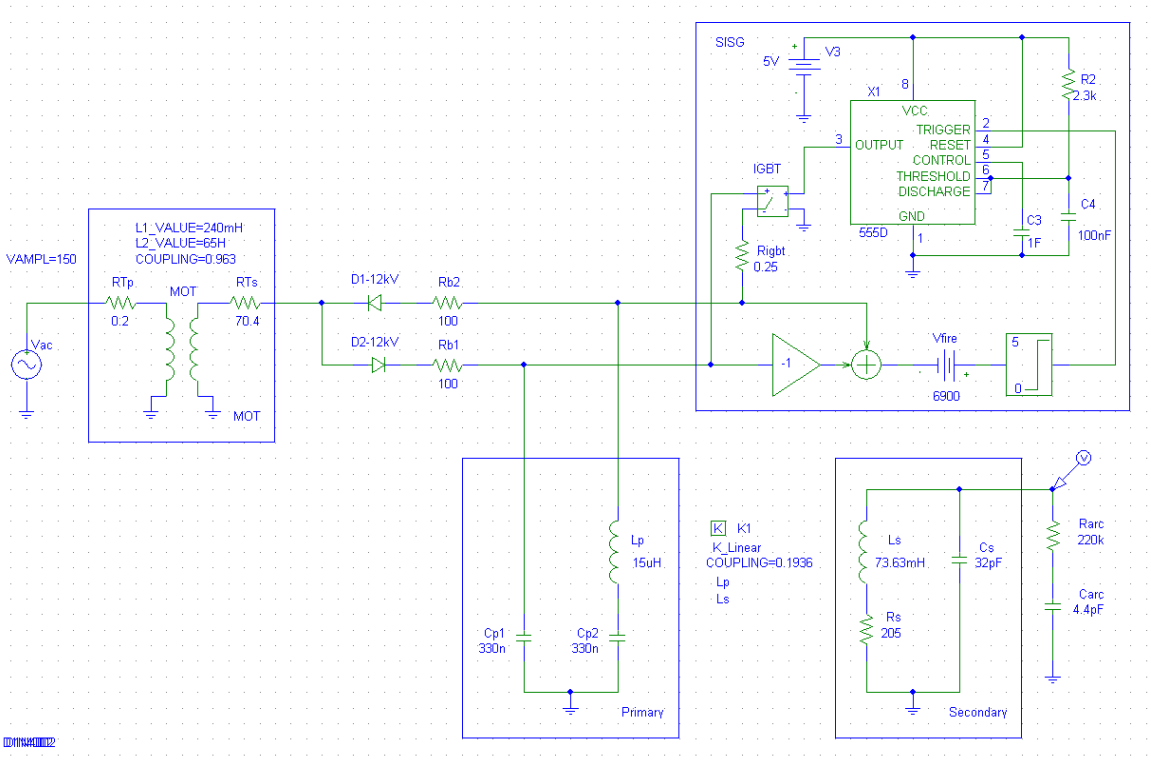

MicroSim Model

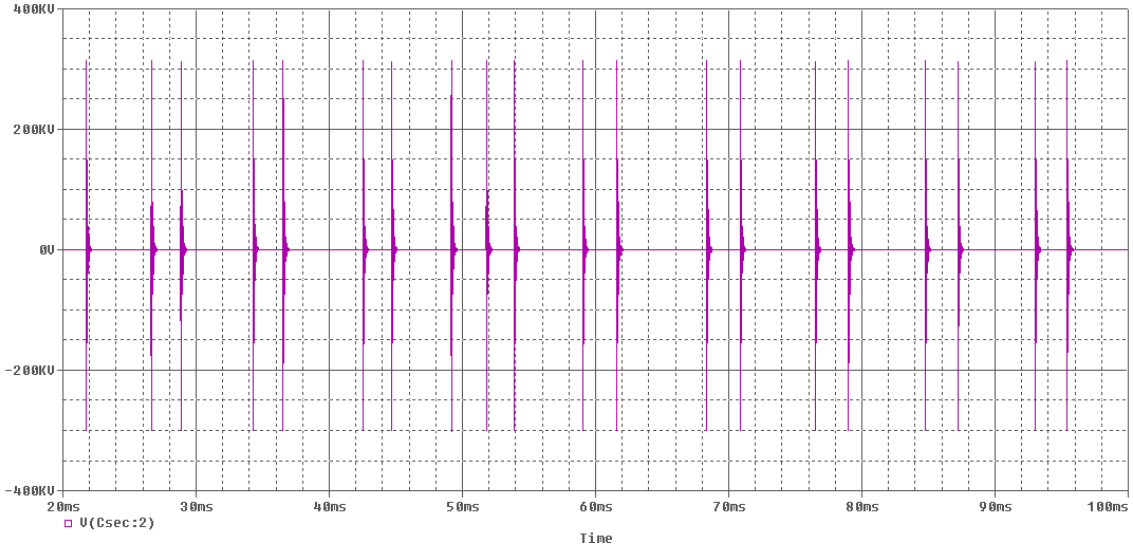

Top Voltage

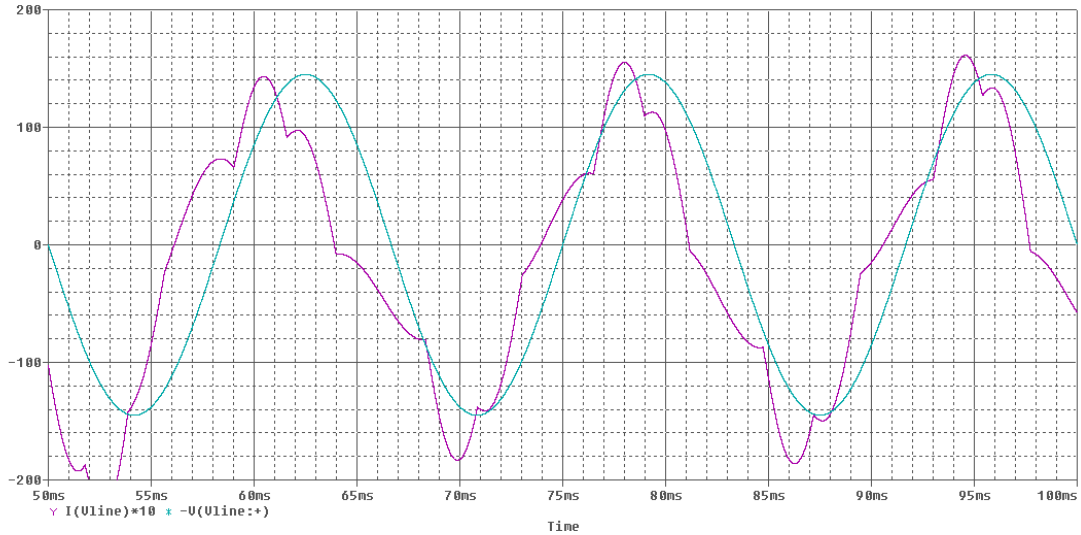

AC Line input Voltage and Current (X10)

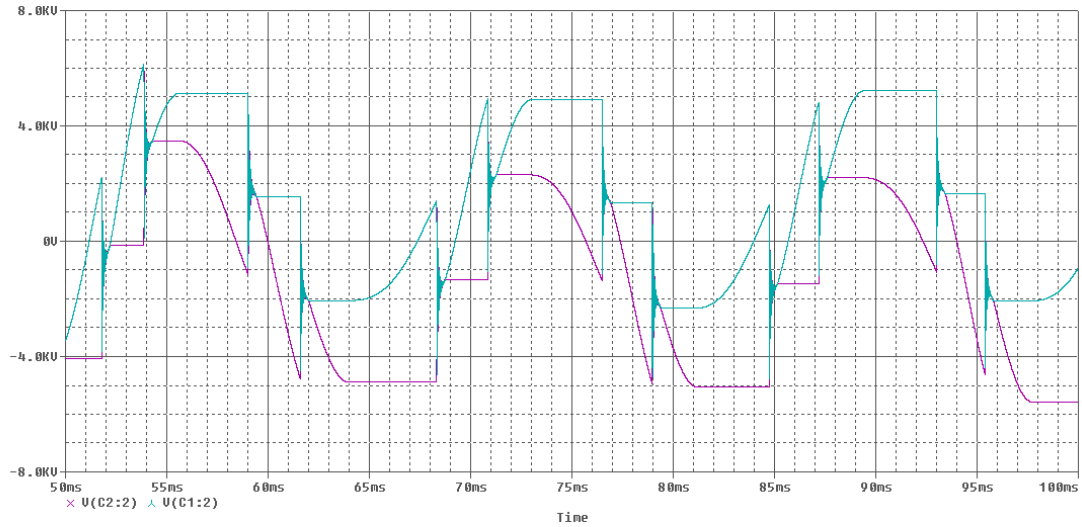

Voltage on each of the two capacitor sections

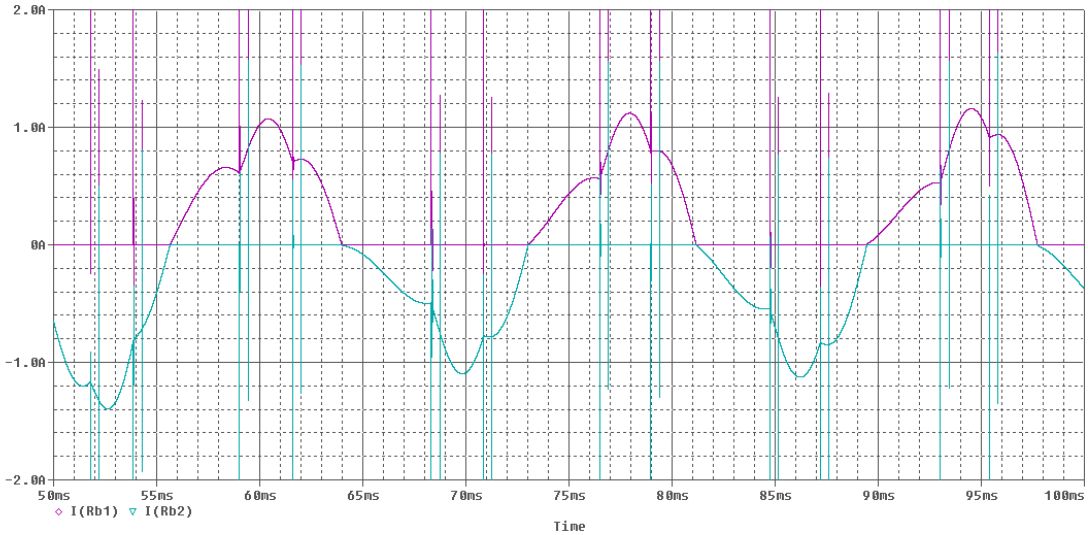

Charging current to each capacitor section

MOT Characteristics:

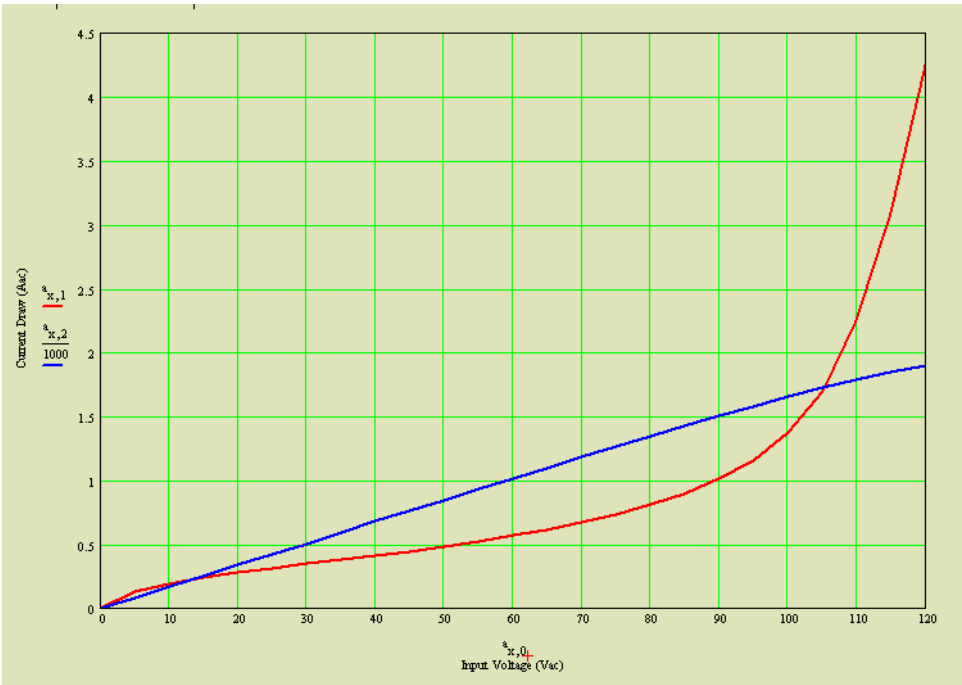

Primary Inductance:

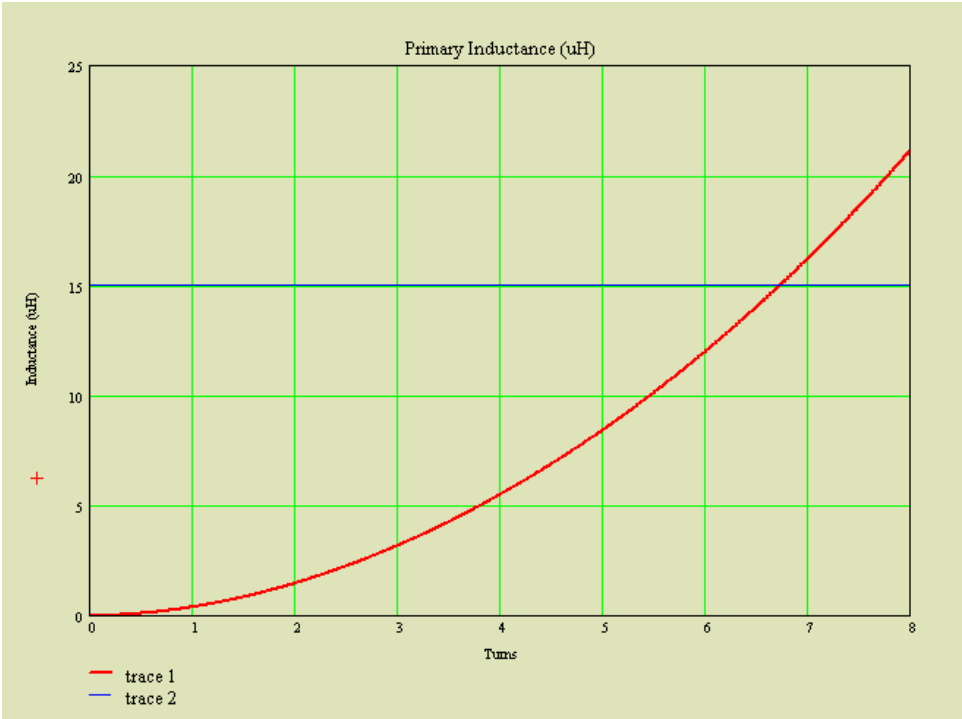

Specifications:

"m" Denotes an actual measured value.
"***d***" Denotes a designed value.
"***c***" Denotes a calculated value.

Charging System:

Spark Gap	SIDAC/IGBT (SISG) 2 X Mark Dunn
Primary Transformer	Microwave Oven Transformer (MOT)
Type	Resonant Rectified High Voltage
Ballast	Two 50 Ohm 100W Resistors on high voltage side *d*
Timing	Asynchronous
Firing Voltage	6800 Volts (adjustable) *d*
Gap Resistance	24M Ohm *d*

Primary Coil:

Inner Diameter	6.75 inches *d*
Pitch	0.375 inches *d*
Maximum Turns	8 *d*
Type	1/4 Inch Diameter Copper Tubing
Primary Loop Resistance	0.25 Ohm *d*

Primary Capacitor:

Type	MMC 3 x 3 array of CD 940C20P33K
Value	165nF *d*
Form	Foam Encased
Bleed Resistors	36 x 4.7M Ohm for 18.8M Ohm Total *d*

Secondary Coil:

Inductance	73.63mH *m*
Wire Type	#28 Magnet 0.0138 Diameter *m*
Wire Copper Diameter	0.01264 inches *d*
Secondary Diameter	6.0 inches *d*
Secondary Length	20.0 inches *d*
Secondary Turns	1363.0 *d*
Secondary DC Resistance	141 Ohms *d*
Secondary AC Resistance	205 Ohms *d*
Secondary "Q" Factor	234 *d*
Form	21.125 x 6 x 0.125 Lexan Tube.
Coating	Stretch Wrap

Top Terminal:

Type	Heating Duct 4 x 25 inch *d*
Location	4.5 inches above top of secondary *d*

General:

Lp	15.0 uH *d*
Cp	165 nF *d*
Fp	101.2 kHz *d*
Rp	0.25 Ω *d*
Qp	38.1 *d*
Ls	73.63 mH *d*
Cs	32.0 pF *d*
Fs	103.7 kHz *d*
Rs	205 Ωac *d*
Qs	234 *d*
"K"	0.1936 *d*
Vfire	6800 V *d*
Primary Turns	~6.5 *d*
Peak Primary Current	648.8 A *d*
RMS Primary Current	35.5 Arms *d*
Coil Power	818.6 W *d*
BPS	~~240 BPS *d*
AC Line Voltage	106.1 Vac *d*
AC Line Current	9.6 Arms (215 BPS) *c*
Real Input Power	890 W (215 BPS) *c*
Power Factor	0.92 *c*